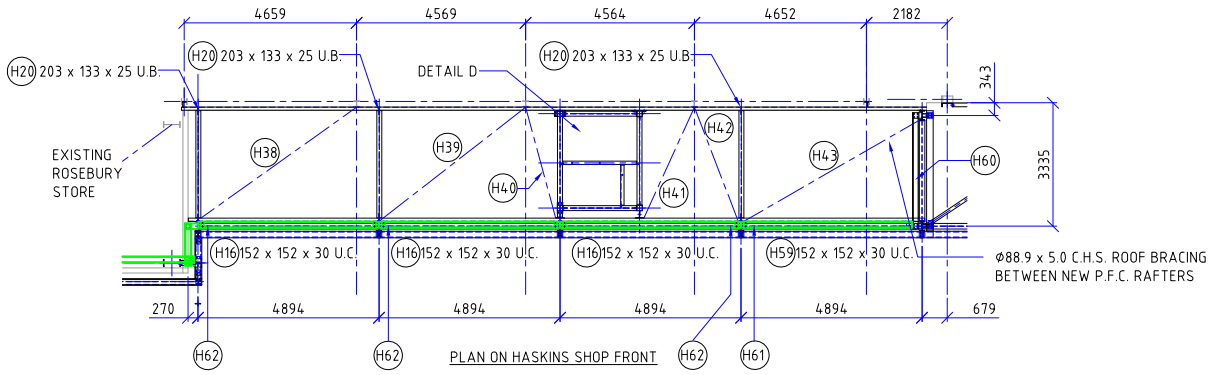

PLAN ON HASKINS SHOP FRONT

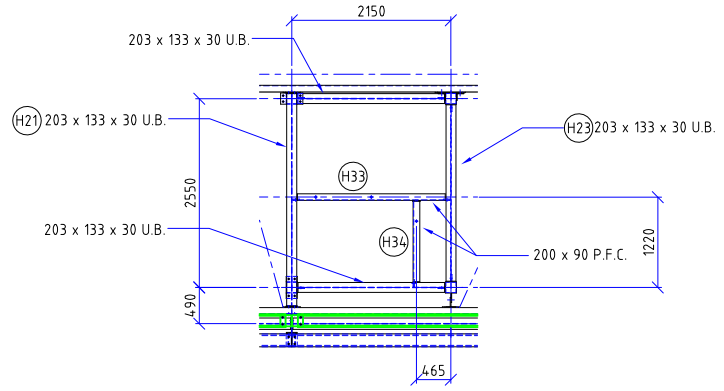

DETAIL D - SCALE 1:50
TOP OF LIFT SHAFT

THIRD ANGLE PROJECTION

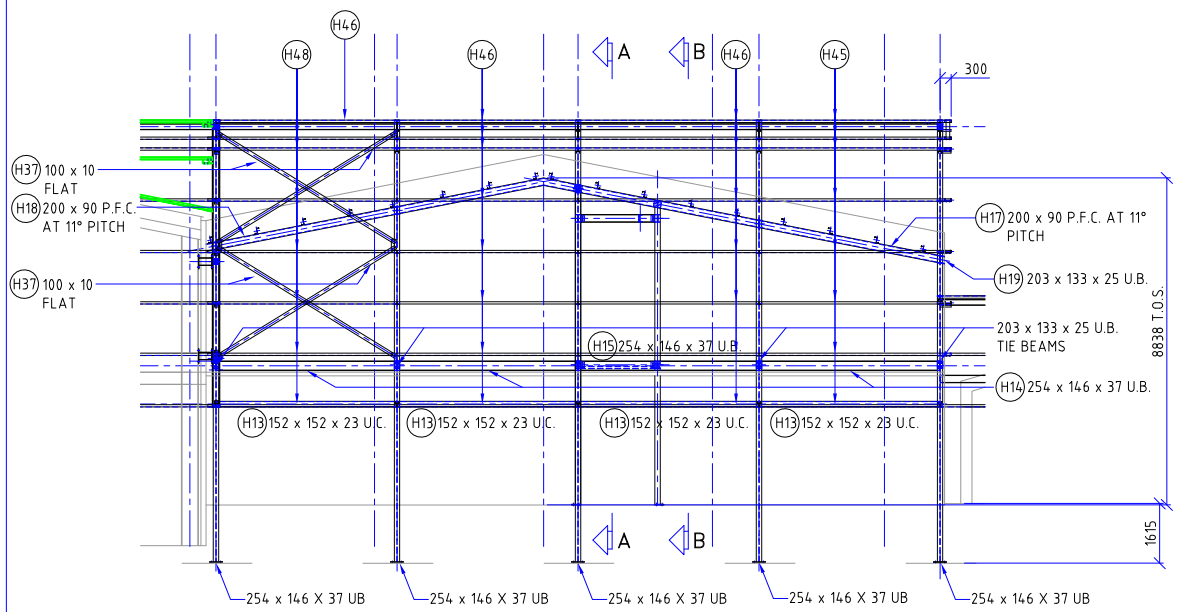

WEST ELEVATION ON HASKINS SHOP FRONT

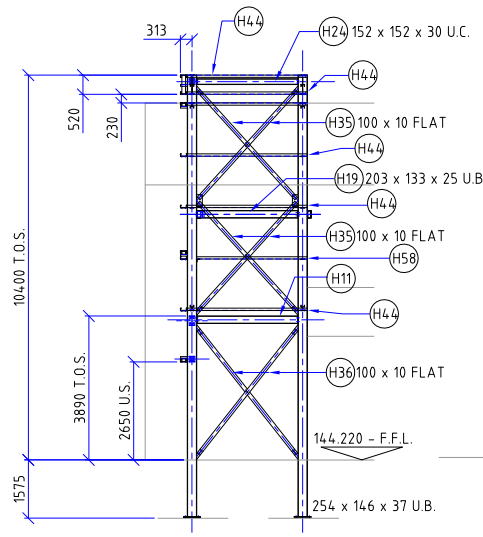

SIDE ELEVATION ON ALDI / HASKINS PARTITION

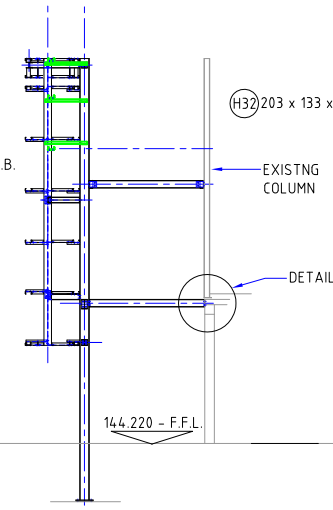

SIDE ELEVATION ON HASKINS / ROSEBURY PARTITION

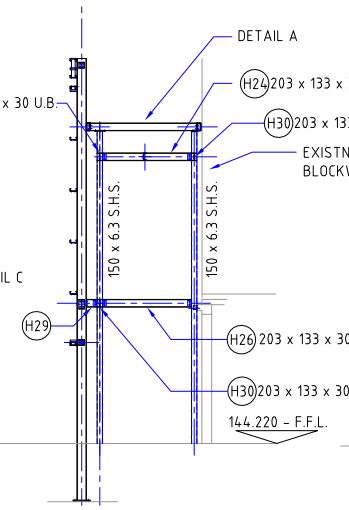

SECTION ON A - A

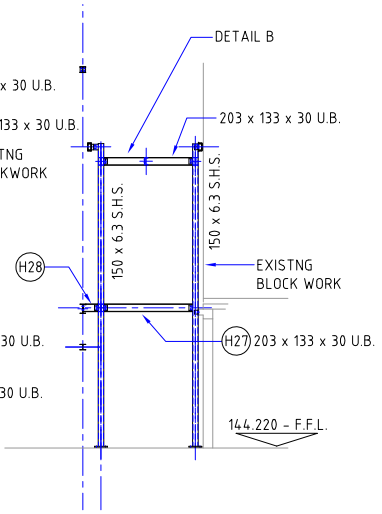

SECTION ON B - B

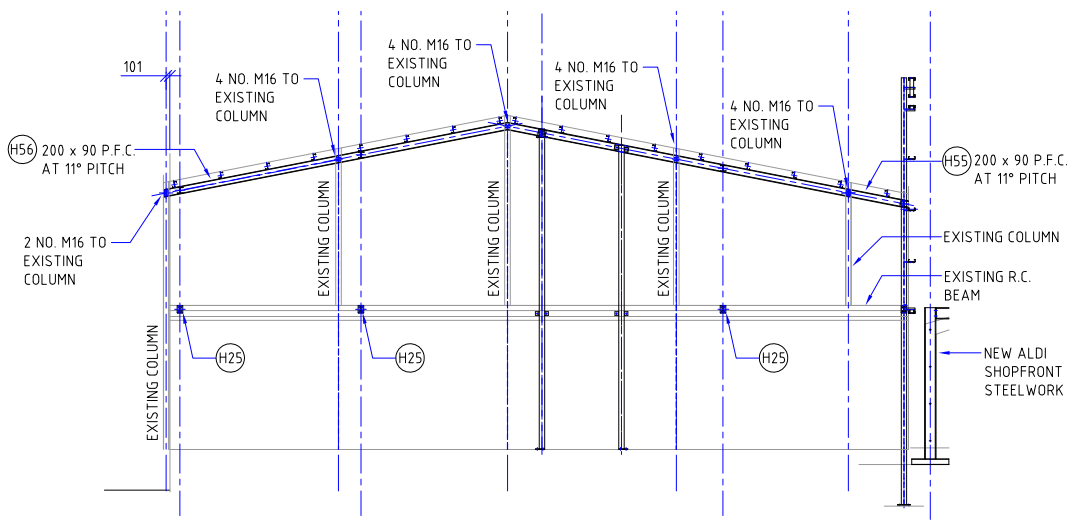

WEST ELEVATION ON HASKINS INNER WALL

NOTE:
BLOCKWORK REMOVED LOCALLY TO FIX NEW STEEL TO EXISTING

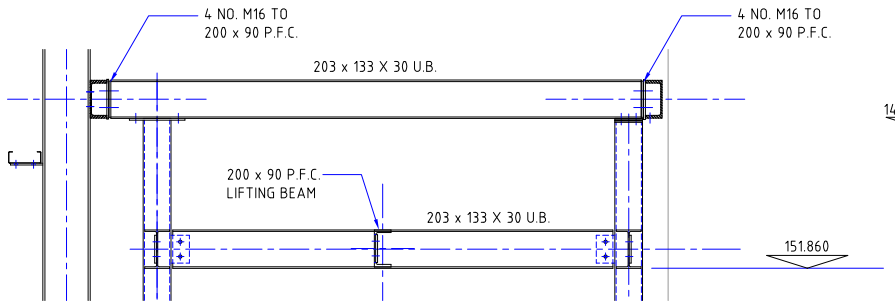

DETAIL A - SCALE 1:10
S.H.S. OF LIFT SHAFT TO CONNECT TO TIE BEAM BETWEEN NEW RAFTERS.

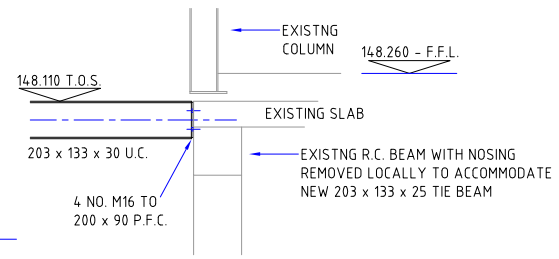

DEATIL C - SCALE 1:10

NOTE: ALL SIDE RAILS ARE ALBION SECTIONS C17618. ALL PURLINS ARE ALBION SECTIONS Z14616.

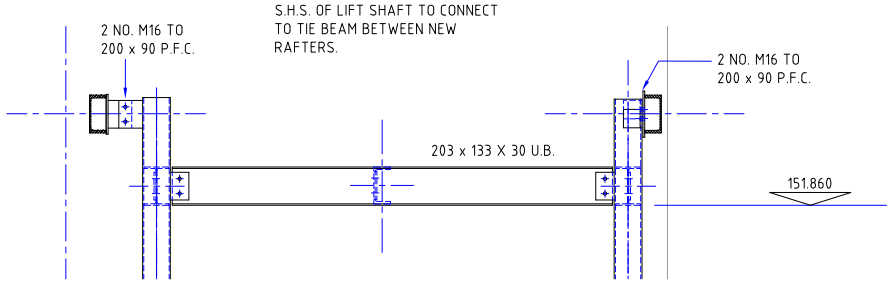

DETAIL B - SCALE 1:10
S.H.S. OF LIFT SHAFT TO CONNECT TO NEW RAFTERS

GENERAL NOTES.
1. ALL MATERIAL M.S. TO BSEN10025 S275.
2. ALL WELDING TO BS EN 1011.
3. ALL WELDS TO BE 6M.M. CONTINUOUS FILLETS FULL PROFILE UNLESS STATED OTHERWISE, SLAG AND SPATTER TO BE REMOVED.
4. SURFACE FINISH - SHOT BLASTED TO SA 2.5 & COATED WITH 75 MICRONS OF ORGANIC ZINC RICH PAINT.
5. ALL EXPOSED EXTERNAL STEELWORK HOT DIPPED GALVANISED, MEAN COATING 85 MICRONS
6. ALL FIXING BOLTS GRADE 8.8 HIGH TENSILE, SHERIDIZED OR SIMILAR TO BRITISH STANDARD.

HI-SPEC ENGINEERING LTD
UNIT 9 WINDMILL IND. EST., WINDMILL, FOWEY, CORNWALL. PL23 1HB
TEL: 01726 833844 FAX: 01726 833811

DRG No	DRAWING REFERENCE TITLE

MOD No	DATE	DETAILS OF MODIFICATION	CHECKED

DRAWN BY: P. MATHAR 29.04.08
CHECKED / APPROVED BY: G. COOKE
DATE: 29.04.08

TITLE: STEELWORK LAYOUT
HASKINS SHOPFRONT, SHEPTON MALLET

CUSTOMER: MAYFLOWER FABRICATIONS LTD

ORIGINAL SCALE/FRAME: 1:100 @ A1
CONTRACT No: MFxxxx

DO NOT SCALE

DRG NO: MFxxxx