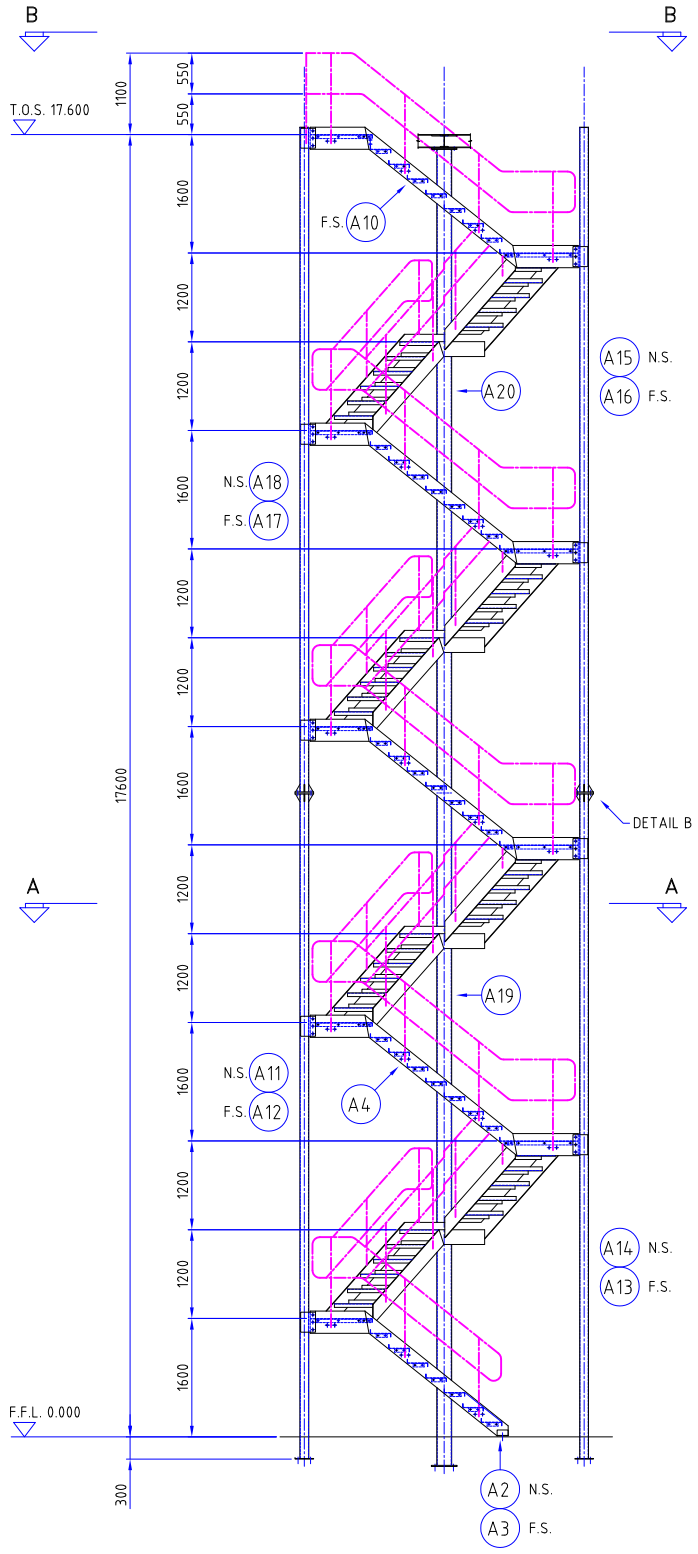

FRONT VIEW

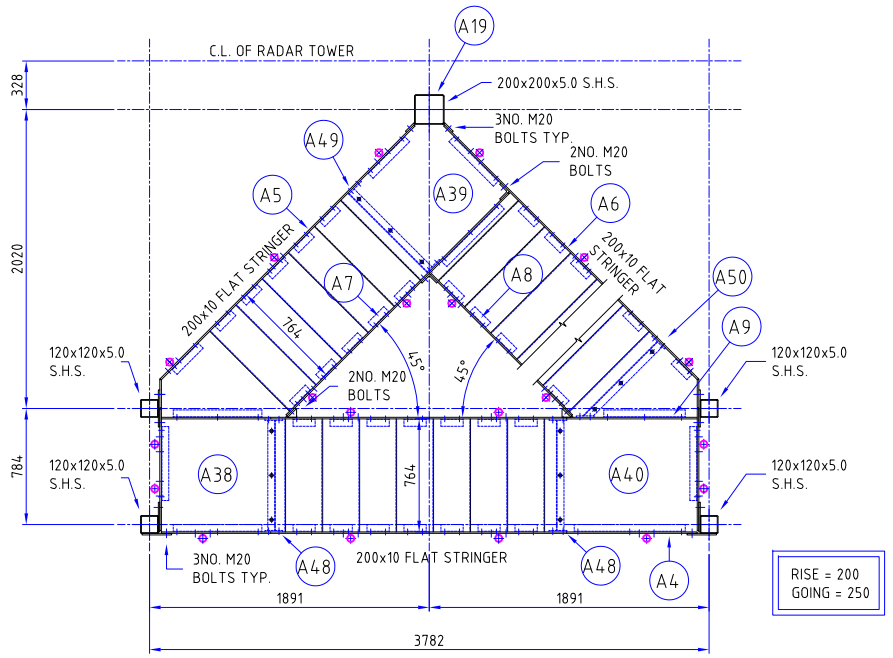

SECTION A – A

SCALE 1:20

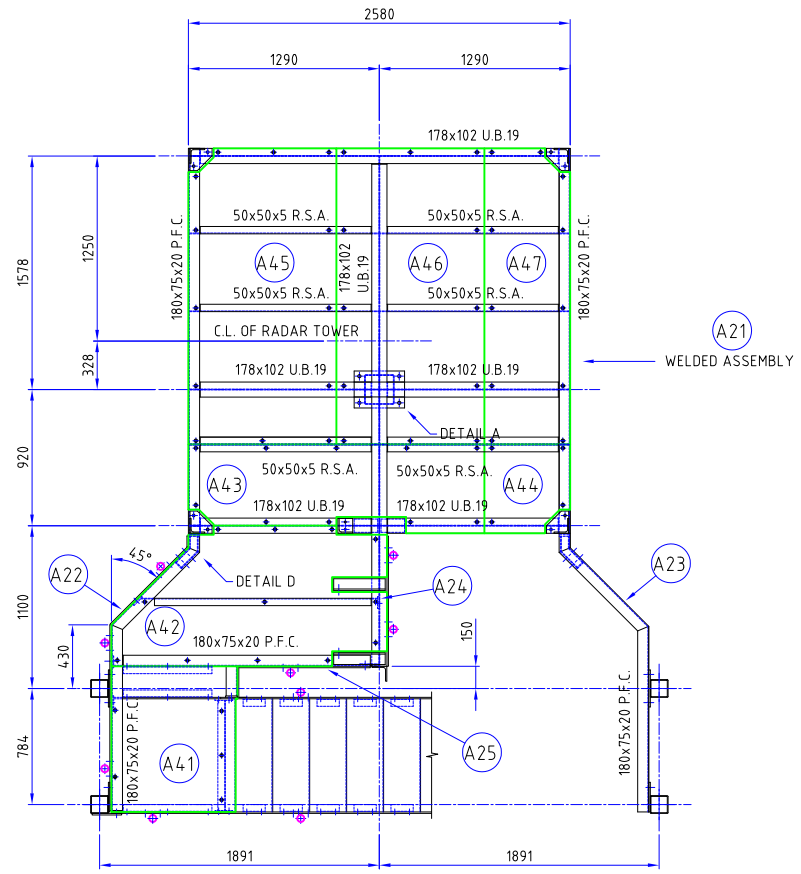

SECTION B – B

SCALE 1:20

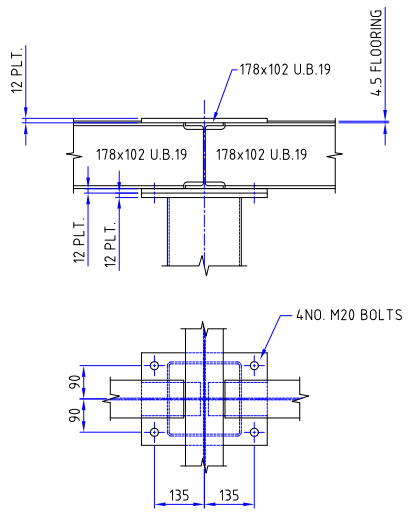

DETAIL A

SCALE 1:10

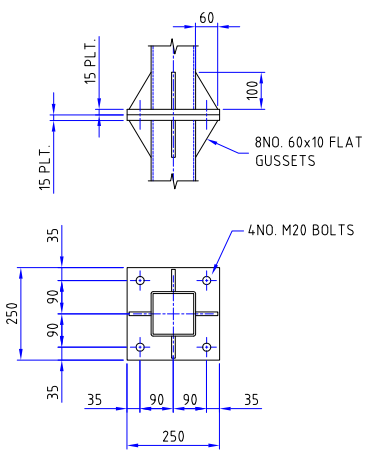

DETAIL B – COLUMN SPLICE

SCALE 1:10

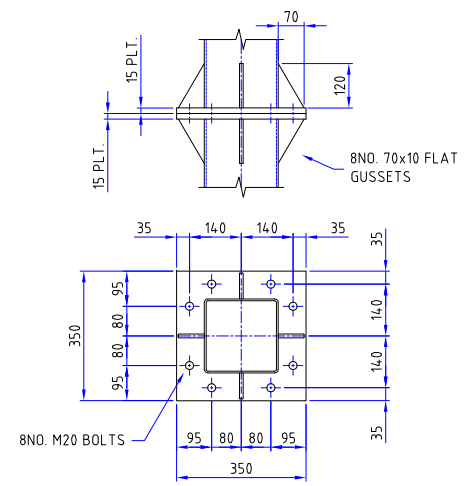

DETAIL C – COLUMN SPLICE

SCALE 1:10

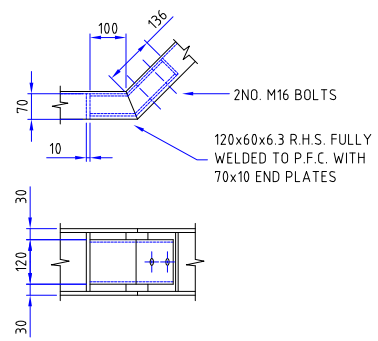

DETAIL D

SCALE 1:10

GENERAL NOTES.

1. ALL MATERIAL M.S. TO BSEN10025 S275.
2. ALL WELDING TO BS EN 1011.
3. ALL WELDS TO BE 6M.M. CONTINUOUS FILLETS FULL PROFILE UNLESS STATED OTHERWISE, SLAG AND SPATTER TO BE REMOVED.
4. ALL STEELWORK HOT DIPPED GALVANISED, MEAN COATING 140 MICRONS
5. ALL FIXING BOLTS GRADE 8.8 HIGH TENSILE, SHERIDIZED OR SIMILAR TO BRITISH STANDARD.

HI-SPEC ENGINEERING LTD

UNIT 9 WINDMILL IND. EST., WINDMILL, FOWEY, CORNWALL. PL23 1HB
TEL: 01726 833844 FAX: 01726 833811

DRG No	DRAWING REFERENCE TITLE

MOD No	DATE	DETAILS OF MODIFICATION	CHECKED
A	15.01.08	GENERAL REVISIONS AND MARK NUMBERS ADDED	G.E.C.

DRAWN BY G. COOKE 14.12.07

CHECKED / APPROVED BY G. COOKE

DATE 14.12.07

TITLE STEELWORK LAYOUT RADAR TOWER ACCESS STAIRS

CUSTOMER MAYFLOWER FABRICATIONS LTD

ORIGINAL SCALE/FRAME 1:50 @ A1

CONTRACT No: MF0237

DO NOT SCALE

DRG NO XXXX